Guardian Main Power Circuit Down Board
Jaakko Muhonen
www.robolab.fi

All Arduino power output
+5.0V
Ground

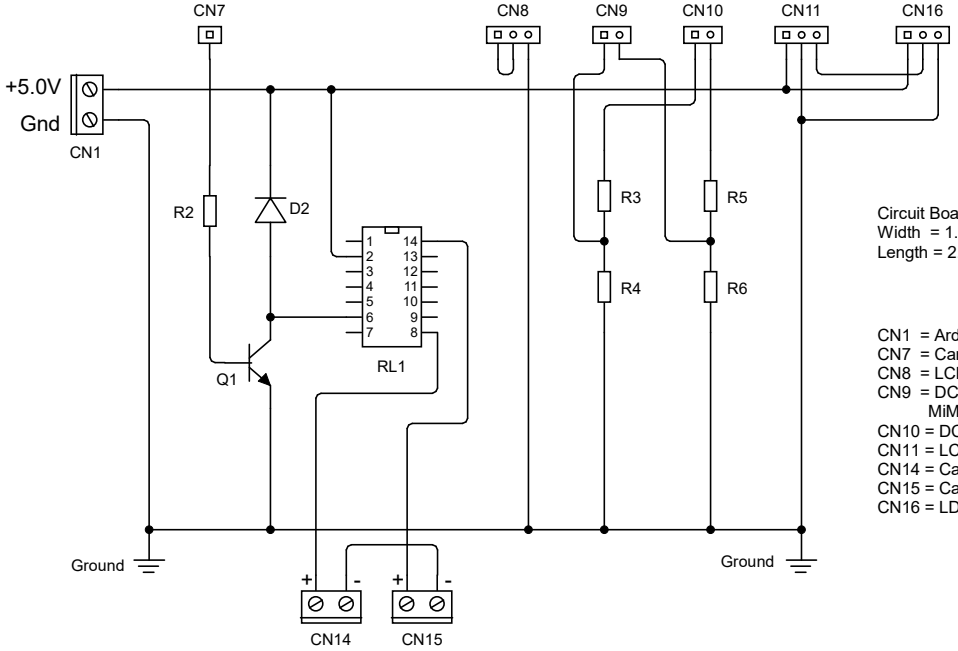

Circuit Board size:
Width = 1.7 in (43 mm)
Length = 2.4 in (61 mm)

CN1 = Arduino power in
CN7 = Camera Arduino pin on/off: pin16
CN8 = LCD Display Arduino power pin on/off (optional use): pin 18
CN9 = DC Voltmeter Vout pins: LiPo 7.4v battery pin A8 (62),
MiMh 9.6v battery pin A9 (63)
CN10 = DC Voltmeter Vin pins (Lipo and MiMh)
CN11 = LCD Display pins
CN14 = Camera power out 5V pins
CN15 = Camera MiMh regulated 5V power in
CN16 = LDR Potentiometer pins (connect to the Potentiometer)