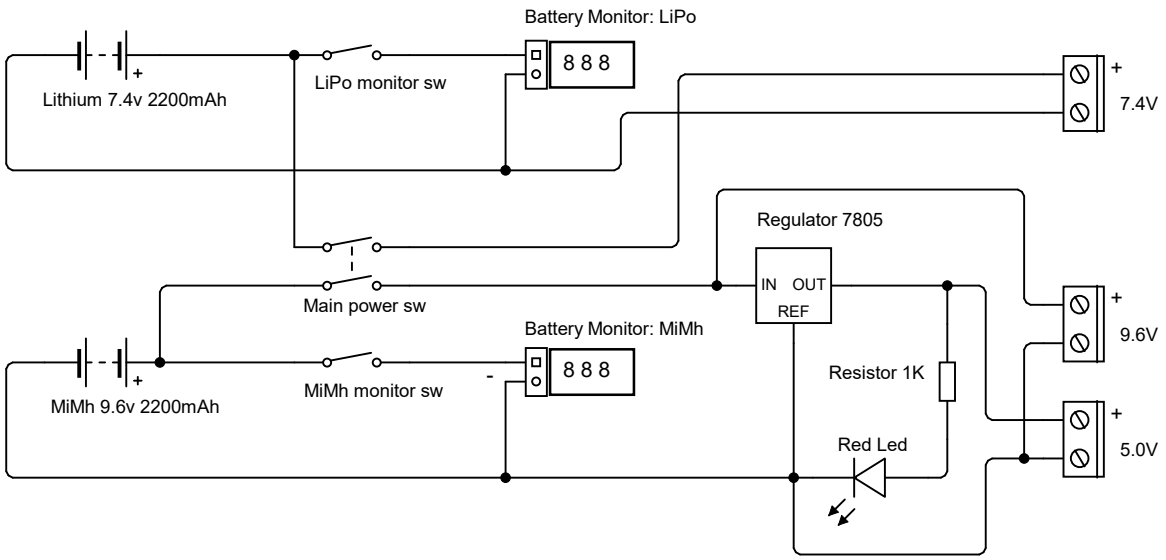Guardian Battery Circuit v1
Jaakko Muhonen
www.robolab.fi